EXPERIMENT-7.a

OBJECTIVE:-

I) To design and Verify truth table of SR flip flop by using NAND gate.
II) To design and Verify truth table of D flip flop by using NAND gate.

THEORY:-

Flip flop:- A flip flop is an electronic circuit with two stable states that can be used to store binary data. The stored data can be changed by applying varying inputs. Flip-flops and latches are fundamental building blocks of digital electronics systems used in computers, communications, and many other types of systems.

SR flip flop:- SR flip-flop is a gated set-reset flip-flop. The S and R inputs control the state of the flip-flop when the clock pulse goes from LOW to HIGH. The flip-flop will not change until the clock pulse is on a rising edge. When both S and R are simultaneously HIGH, it is uncertain whether the outputs will be HIGH or LOW.

D flip flop:- A D flip flop has a single data input. This type of flip flop is obtained from the SR flip flop by connecting the R input through an inverter, and the S input is connected directly to data input. The modified clocked SR flip-flop is known as D-flip-flop and is shown below. From the truth table of SR flip-flop we see that the output of the SR flip-flop is in unpredictable state when the inputs are same and high. In many practical applications, these input conditions are not required. These input conditions can be avoided by making them complement of each other.

BLOCK DIAGRAM:-

SR Flip Flop:-

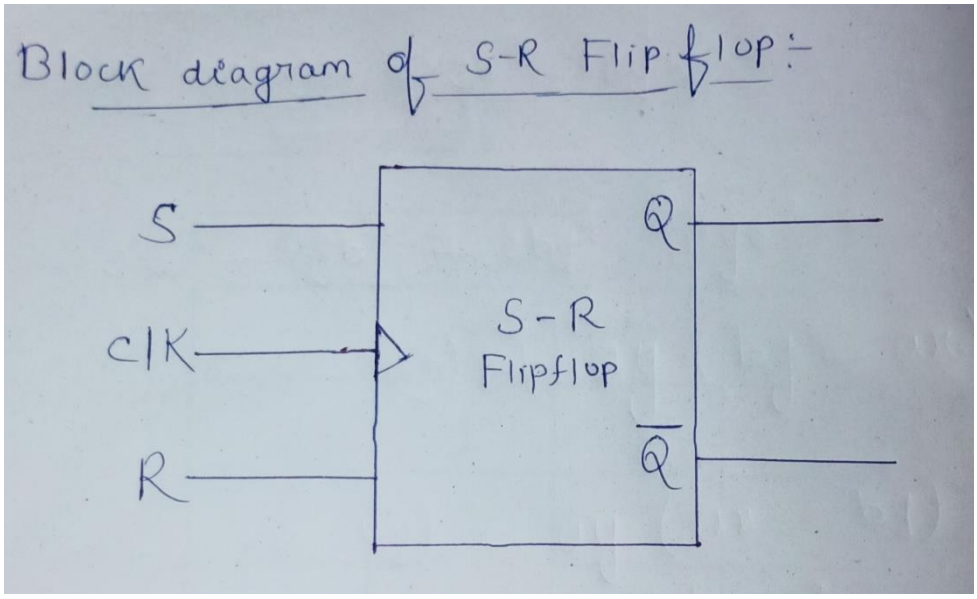

D Flip Flop:-

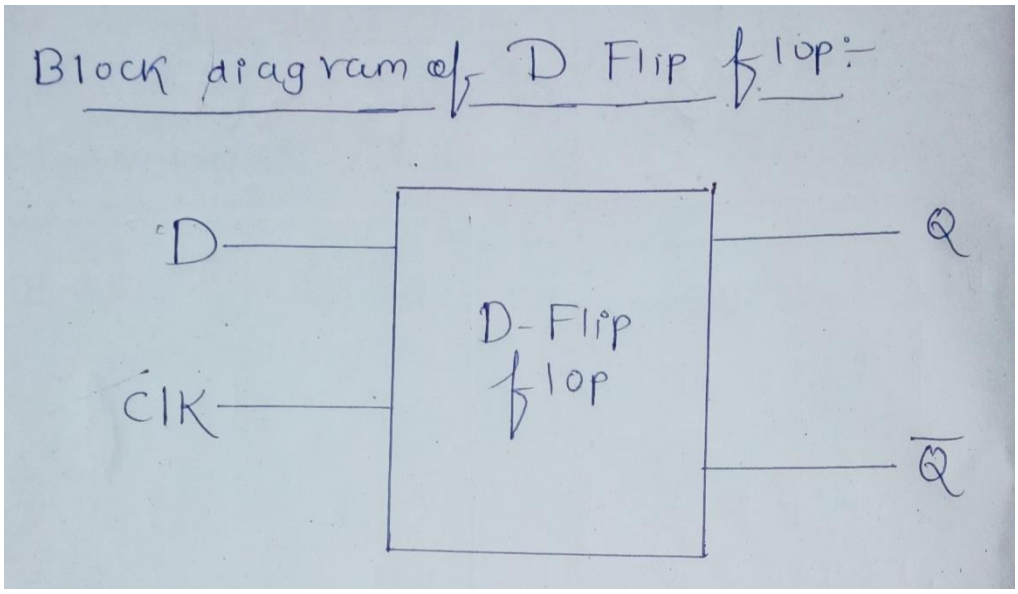

TRUTH TABLE:-

SR Flip Flop:-

Truth Table of S-R Flip Flop:-

CIK	S	R	Q_{n+1}
0	x	x	Q_n
1	0	0	Q_n
1	0	1	0
1	1	0	1
1	1	1	Invalid

D Flip Flop:-

Truth Table of D-Flip flop:-

CIK	D	Q_{n+1}
0	X	Q_n
1	0	0
1	1	1

CHARACTERISTIC TABLE:-

SR Flip Flop:-

Characteristic Table of S-R Flip Flop:-

Q_n	S	R	Q_{n+1}
0	0	0	0
0	0	1	0
0	1	0	1
0	1	1	Invalid
1	0	0	1
1	0	1	0
1	1	0	1
1	1	1	Invalid

D Flip Flop:-

Characteristic Table of D- Flip flop:-

Q_n	D	Q_{n+1}
0	0	0
0	1	1
1	0	0
1	1	1

EXCITATION TABLE:-

SR Flip Flop:-

Excitation Table of S-R Flip flop:-

Q_n	Q_{n+1}	S	R
0	0	0	X
0	1	1	0
1	0	0	1
1	1	X	0

D Flip Flop:-

Excitation Table of D-Flip Flop:-

Q_n	Q_{n+1}	D
0	0	0
0	1	1
1	0	0
1	1	1

LOGICAL EXPRESSION:-

SR FLIP FLOP:-

K-map by using characteristic Table:-

Q_n \ SR	00	01	11	10
0	0	0	X	1
1	1	0	X	1

$$Q_{n+1} = S + Q_n \cdot \overline{R}$$

D Flip Flop:-

From the characteristic table of D flip flop we can clearly see that Q n+1=D.

CIRCUIT DIAGRAM:-

SR FLIP FLOP:-

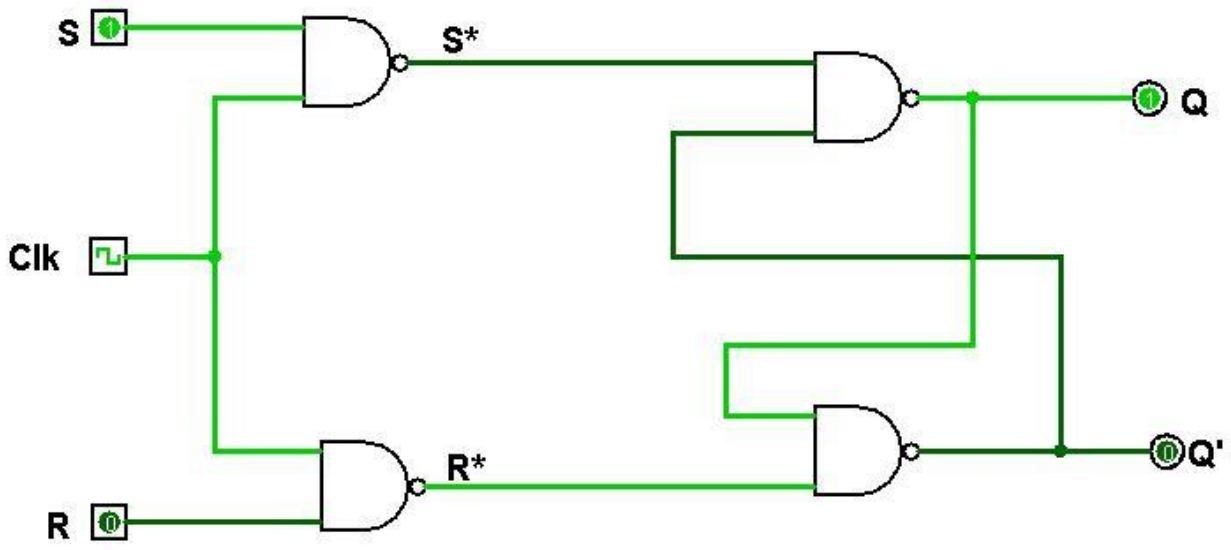

S-R FLIP FLOP

D FLIP FLOP:-

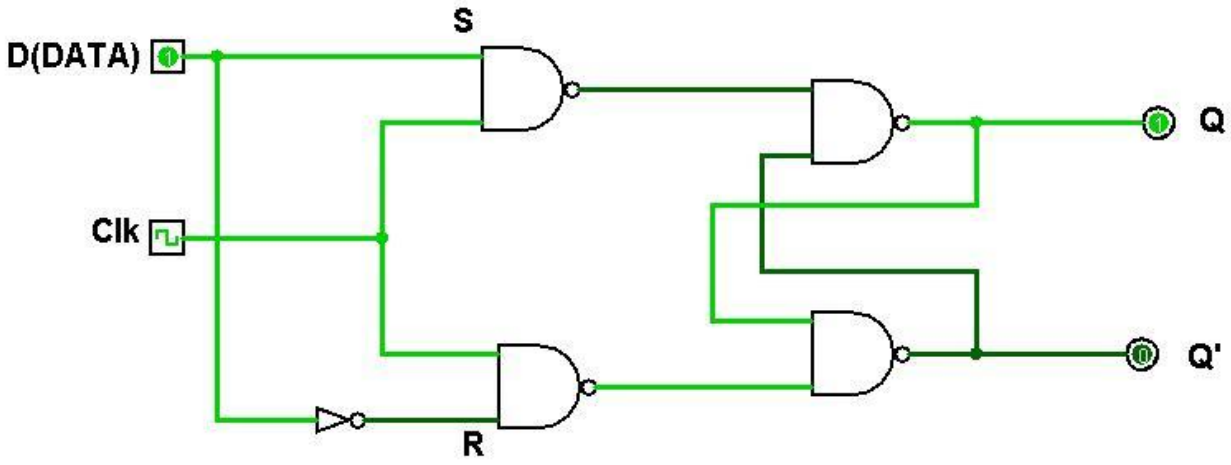

D-FLIP FLOP

CONCLUSION:-

So by using the nand gate we implemented both SR flip flop and D flip flop .The circuit of the S-R flip flop using NAND Gate and its truth table is shown above. We can say that D flip flop is actually a slight modification of the above explained clocked SR flip-flop.